General Standards Corporation

High Performance Bus Interface Solutions

PMC66-SIO4BXR

Four Channel High Performance Serial I/O PMC Card

Featuring RS422/RS485/RS232/RS423 Software Configurable Transceivers and 32K Byte FIFO Buffers (256K Byte Total)

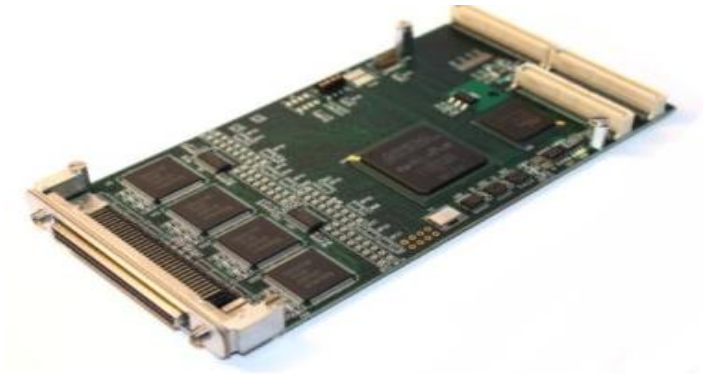

The PMC66-SIO4BXR is a four channel serial interface card which provides high speed, full-duplex, multi-protocol serial capability for PMC applications. The PMC66-SIO4BXR combines multi-protocol Dual Universal Serial Controllers, deep external FIFOs, and software selectable multi-protocol transceivers to provide four fully independent synchronous/asynchronous serial channels. These features, along with a high performance 66MHz PCI interface engine, give the PMC66-SIO4BXR unsurpassed performance in a serial interface card.

Features:

- Four Independent Multi-Protocol Serial Channels
- Serial Mode Protocols include Asynchronous, Monosync, Bisync, SDLC, HDLC, Nine-Bit, and IEEE 802.3
- Synchronous Serial Data Rates up to 10Mbps
- Asynchronous Serial Data Rates up to 1Mbps
- Independent Transmit and Receive FIFOs for each channel - Up to 32K byte each
- Multiprotocol Transceivers support RS422 (V.11)/RS485, RS423 (V.10), RS232 (V.28), V.35, and RS530
- Parity and CRC detection capability
- Programmable Oscillators provide flexibility for Baud Rate Clock generation
- PMC Rear IO Connection
- SCSI type 68 pin front edge I/O Connector
- Eight signals per channel, configurable as DTE or DCE:
  3 Serial Clocks (TxC,RxC,AuxC), 2 Serial Data signals (TxD,RxD), CTS, RTS, DCD
- Unused signals may be reconfigured as General Purpose IO
- Fast RS422/RS485 Differential Cable Transceivers Provide Data Rates up to 10Mbps
- RS423 and RS232 Cable Transceivers Provide Data Rates up to 230kbps
- Industry Standard Zilog Z16C30 Multi-Protocol Universal Serial Controllers (USC®)
- Standard Cable to four DB25 connectors and Custom Cables available
- Available drivers include VxWorks, WinNT, Win2k, WinXP, Linux, and Labview
- Industrial Temperature Option Available
- May be mounted on various adapters to fit PCI, PCIe, PXI, and cPCI form factors

General Standards Corporation
8302A Whitesburg Drive ·Huntsville, AL 35802
Phone: (256)880-8787 or (800)653-9970
FAX: (256)880-8788
Email: sales@generalstandards.com

Functional Diagram:

The PMC66-SIO4BXR is a high performance, four channel serial board from the SIO4BX product line from General Standards Corporation. The PMC66-SIO4BXR has a 66MHz PCI interface, multi-protocol transceivers, and supports the PMC Rear IO. This card may also be mounted on various adapters to fit PCI, PCIe, PXI, and cPCI form factors.

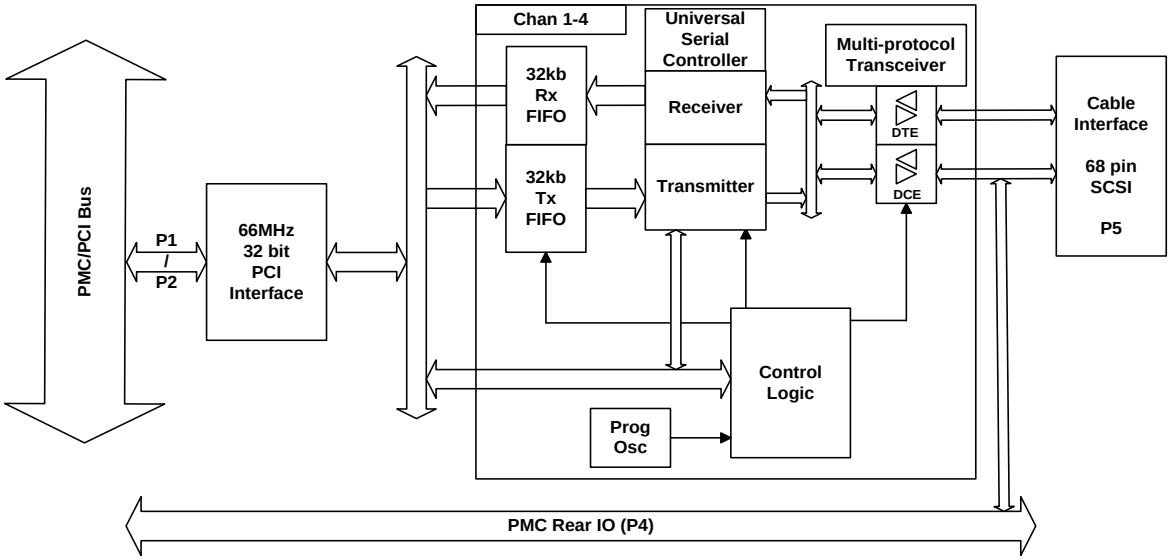

Universal Serial Controller Data Modes:

- Asynchronous — Sample rates of 1/16, 1/32/ or 1/64 Clock Rate. Programmable Start/Stop/Parity Bits
- Isochronous — 1x Synchronous Clocking . Programmable Start/Stop/Parity Bits
- Async with Code Violations — Start Bit replaced with Three Bit Code Violation Pattern as in MIL-STD-1553B
- Monosync — Single Character used for Synchronization
- Bisync — Two Characters used for Synchronization
- HDLC — Receiver recognizes Flags, Optional Address Matching, Zero Deletion, and CRC Checking
- Bisync Transparent — Sync Pattern is DLE-SYN Programmable.
- NineBit — Additional Address/Data bit between Parity and Stop Bits
- 802.3 — Implements Data Format of 802.3 with 16 bit Address Compare
- Slaved Monosync — Transmit Data is Synchronized to Received Data
- HDLC Loop — Transmitter Echoes Received Messages

Universal Serial Controller Data Encoding:

- NRZ
- NRZB
- NRZI-Mark
- NRZI-Space
- Biphase Mark
- Biphase-Space
- Biphase Level
- Differential Biphase Level

See Zilog Z16C30 data sheet at www.zilog.com for detailed Universal Serial Controller Capabilities

General Standards Corporation
8302A Whitesburg Drive ·Huntsville, AL 35802
Phone: (256)880-8787 or (800)653-9970
FAX: (256)880-8788
Email: sales@generalstandards.com

Power Requirements (@25° C):

- +5VDC ±0.2 VDC at 1.5 Amps Max(typical 1.0 Amps)
- +12VDC ±0.2 VDC at 0.03 Amps Max(typical 0.02 Amps)
- Typical Total Power Dissipation: ~5.25W

PMC Compatibility:

- 32bit / 66MHz PCI r2.2 Compliant
- Direct master DMA transfer
- Provides a single multifunction interrupt (INTA)
- 3.3V IO / 5V tolerant PCI bus interface

Physical Characteristics:

Conforms to PMC Mezzanine Specification
Length: 149 mm
Width: 74 mm

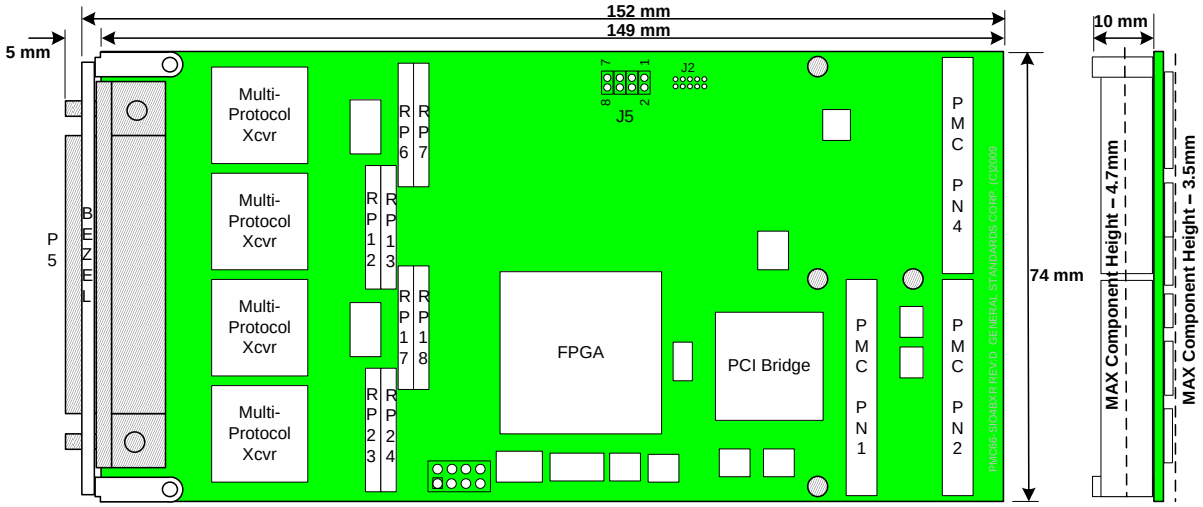

Environmental Specifications:

Ambient Temperature Range:	Operating:	0° to +70° C (Commercial Option)
		-40° to +85° C (Industrial Option)
	Storage:	-40° to +85° C
Relative Humidity:	Operating:	0 to 80%, non-condensing
	Storage:	0 to 95%, non-condensing
Altitude:	Operation to 10,000 ft	

Cooling Requirements:

Conventional air-cooling, 200 LPFM (typical mezzanine environment)

Ordering Information:

PMC66 – SIO4BXR - *<FIFO Size> - <Temperature>*

Option	Valid Selections	Description
FIFO Size	48KLC	(software selectable) 4K byte Tx / 8K byte Rx FIFO or 8K byte Tx / 4K byte Rx FIFO
	64K	software selectable) 8K byte Tx / 16K byte Rx FIFO or 16K byte Tx / 8K byte Rx FIFO
	256K	32K byte Tx / 32K byte Rx FIFO
Temperature	<blank>	0°C to +70°C – Commercial (Standard)
	I	-40°C to +85°C – Industrial

General Standards Corporation
8302A Whitesburg Drive ·Huntsville, AL 35802
Phone: (256)880-8787 or (800)653-9970
FAX: (256)880-8788
Email: sales@generalstandards.com

System I/O Connections:

User I/O Connector:: 68-pin SCSI connector (female) - P5
Part Number: AMP/TYCO 787170-7
Mating Connector: AMP/TYCO 749111-6 (or equivalent)

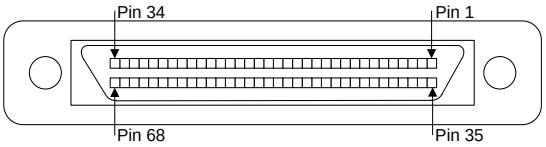

Note: Protocol Mode is set on a per channel basis.

Pin #	RS422/RS485 V.35		RS232		RS423		Pin #	RS422/RS485 V.35		RS232		RS423	
	DTE	DCE	DTE	DCE	DTE	DCE		DTE	DCE	DTE	DCE	DTE	DCE
1	AUXC1+		Unused		TXC1	RXC1	35	AUXC3+		Unused		TXC3	RXC3
2	AUXC1-		AUXC1		RXC1	TXC1	36	AUXC3-		AUXC3		RXC3	TXC3
3	DCD1+		Unused		TXD1	RXD1	37	DCD3+		Unused		TXD3	RXD3
4	DCD1-		DCD1		RXD1	TXD1	38	DCD3-		DCD3		RXD3	TXD3
5	CTS1+	RTS1+	Unused		Unused		39	CTS3+	RTS3+	Unused		Unused	
6	CTS1-	RTS1-	CTS1	RTS1	CTS1	RTS1	40	CTS3-	RTS3-	CTS3	RTS3	CTS3	RTS3
7	RXD1+	TXD1+	Unused		Unused		41	RXD3+	TXD3+	Unused		Unused	
8	RXD1-	TXD1-	RXD1	TXD1	Unused		42	RXD3-	TXD3-	RXD3	TXD3	Unused	
9	RXC1+	TXC1+	Unused		Unused		43	RXC3+	TXC3+	Unused		Unused	
10	RXC1-	TXC1-	RXC1	TXC1	Unused		44	RXC3-	TXC3-	RXC3	TXC3	Unused	
11	RTS1+	CTS1+	Unused		Unused		45	RTS3+	CTS3+	Unused		Unused	
12	RTS1-	CTS1-	RTS1	CTS1	RTS1	CTS1	46	RTS3-	CTS3-	RTS3	CTS3	RTS3	CTS3
13	TXD1+	RXD1+	Unused		Unused		47	TXD3+	RXD3+	Unused		Unused	
14	TXD1-	RXD1-	TXD1	RXD1	Unused		48	TXD3-	RXD3-	TXD3	RXD3	Unused	
15	TXC1+	RXC1+	Unused		Unused		49	TXC3+	RXC3+	Unused		Unused	
16	TXC1-	RXC1-	TXC1	RXC1	Unused		50	TXC3-	RXC3-	TXC3	RXC3	Unused	
17	SGND1		SGND1		SGND1		51	SGND3		SGND3		SGND3	
18	SGND2		SGND2		SGND2		52	SGND4		SGND4		SGND4	
19	CTS2+	RTS2+	Unused		Unused		53	CTS4+	RTS4+	Unused		Unused	
20	CTS2-	RTS2-	CTS2	RTS2	CTS2	RTS2	54	CTS4-	RTS4-	CTS4	RTS4	CTS4	RTS4
21	RXD2+	TXD2+	Unused		Unused		55	RXD4+	TXD4+	Unused		Unused	
22	RXD2-	TXD2-	RXD2	TXD2	Unused		56	RXD4-	TXD4-	RXD4	TXD4	Unused	
23	RXC2+	TXC2+	Unused		Unused		57	RXC4+	TXC4+	Unused		Unused	
24	RXC2-	TXC2-	RXC2	TXC2	Unused		58	RXC4-	TXC4-	RXC4	TXC4	Unused	
25	RTS2+	CTS2+	Unused		Unused		59	RTS4+	CTS4+	Unused		Unused	
26	RTS2-	CTS2-	RTS2	CTS2	RTS2	CTS2	60	RTS4-	CTS4-	RTS4	CTS4	RTS4	CTS4
27	TXD2+	RXD2+	Unused		Unused		61	TXD4+	RXD4+	Unused		Unused	
28	TXD2-	RXD2 -	TXD2	RXD2	Unused		62	TXD4-	RXD4-	TXD4	RXD4	Unused	
29	TXC2+	RXC2+	Unused		Unused		63	TXC4+	RXC4+	Unused		Unused	
30	TXC2-	RXC2-	TXC2	TXC2	Unused		64	TXC4-	RXC4-	TXC4	RXC4	Unused	
31	DCD2+		Unused		TXD2	RXD2	65	DCD4+		Unused		TXD4	RXD4
32	DCD2-		DCD2		RXD2	TXD2	66	DCD4-		DCD4		RXD4	TXD4
33	AUXC2+		Unused		TXC2	RXC2	67	AUXC4+		Unused		TXC4	RXC4
34	AUXC2-		AUXC2		RXC2	TXC2	68	AUXC4-		AUXC4		RXC4	TXC4

Table 1- Front Panel (P5) IO Connections

General Standards Corporation
8302A Whitesburg Drive ·Huntsville, AL 35802
Phone: (256)880-8787 or (800)653-9970
FAX: (256)880-8788
Email: sales@generalstandards.com

System I/O Connections (cont):

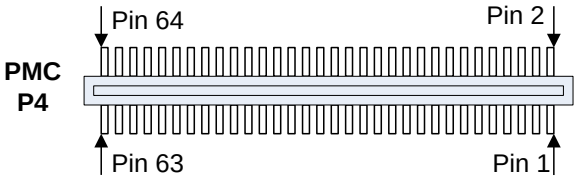

Note: Protocol Mode is set on a per channel basis.

Pin #	RS422/RS485 V.35		RS232		RS423		Pin #	RS422/RS485 V.35		RS232		RS423	
	DTE	DCE	DTE	DCE	DTE	DCE		DTE	DCE	DTE	DCE	DTE	DCE
1	TXC1-	RXC1-	TXC1	RXC1	Unused		33	TXC3-	RXC3-	TXC3	RXC3	Unused	
2	TXC1+	RXC1+	Unused		Unused		34	TXC3+	RXC3+	Unused		Unused	
3	TXD1-	RXD1-	TXD1	RXD1	Unused		35	TXD3-	RXD3-	TXD3	RXD3	Unused	
4	TXD1+	RXD1+	Unused		Unused		36	TXD3+	RXD3+	Unused		Unused	
5	RTS1-	CTS1-	RTS1	CTS1	RTS1	CTS1	37	RTS3-	CTS3-	RTS3	CTS3	RTS3	CTS3
6	RTS1+	CTS1+	Unused		Unused		38	RTS3+	CTS3+	Unused		Unused	
7	AUXC1-		AUXC1		RXC1	TXC1	39	AUXC3-		AUXC3		RXC3	TXC3
8	AUXC1+		Unused		TXC1	RXC1	40	AUXC3+		Unused		TXC3	RXC3
9	DCD1-		DCD1		RXD1	TXD1	41	DCD3-		DCD3		RXD3	TXD3
10	DCD1+		Unused		TXD1	RXD1	42	DCD3+		Unused		TXD3	RXD3
11	RXC1-	TXC1-	RXC1	TXC1	Unused		43	RXC3-	TXC3-	RXC3	TXC3	Unused	
12	RXC1+	TXC1+	Unused		Unused		44	RXC3+	TXC3+	Unused		Unused	
13	RXD1-	TXD1-	RXD1	TXD1	Unused		45	RXD3-	TXD3-	RXD3	TXD3	Unused	
14	RXD1+	TXD1+	Unused		Unused		46	RXD3+	TXD3+	Unused		Unused	
15	CTS1-	RTS1-	CTS1	RTS1	CTS1	RTS1	47	CTS3-	RTS3-	CTS3	RTS3	CTS3	RTS3
16	CTS1+	RTS1+	Unused		Unused		48	CTS3+	RTS3+	Unused		Unused	
17	TXC2-	RXC2-	TXC2	TXC2	Unused		49	TXC4-	RXC4-	TXC4	RXC4	Unused	
18	TXC2+	RXC2+	Unused		Unused		50	TXC4+	RXC4+	Unused		Unused	
19	TXD2-	RXD2 -	TXD2	RXD2	Unused		51	TXD4-	RXD4-	TXD4	RXD4	Unused	
20	TXD2+	RXD2+	Unused		Unused		52	TXD4+	RXD4+	Unused		Unused	
21	RTS2-	CTS2-	RTS2	CTS2	RTS2	CTS2	53	RTS4-	CTS4-	RTS4	CTS4	RTS4	CTS4
22	RTS2+	CTS2+	Unused		Unused		54	RTS4+	CTS4+	Unused		Unused	
29	AUXC2-		AUXC2		RXC2	TXC2	55	AUXC4-		AUXC4		RXC4	TXC4
30	AUXC2+		Unused		TXC2	RXC2	56	AUXC4+		Unused		TXC4	RXC4
25	DCD2-		DCD2		RXD2	TXD2	57	DCD4-		DCD4		RXD4	TXD4
26	DCD2+		Unused		TXD2	RXD2	58	DCD4+		Unused		TXD4	RXD4
27	RXC2-	TXC2-	RXC2	TXC2	Unused		59	RXC4-	TXC4-	RXC4	TXC4	Unused	
28	RXC2+	TXC2+	Unused		Unused		60	RXC4+	TXC4+	Unused		Unused	
29	RXD2-	TXD2-	RXD2	TXD2	Unused		61	RXD4-	TXD4-	RXD4	TXD4	Unused	
30	RXD2+	TXD2+	Unused		Unused		62	RXD4+	TXD4+	Unused		Unused	
31	CTS2-	RTS2-	CTS2	RTS2	CTS2	RTS2	63	CTS4-	RTS4-	CTS4	RTS4	CTS4	RTS4
32	CTS2+	RTS2+	Unused		Unused		64	CTS4+	RTS4+	Unused		Unused	

Table 2- PMC (P4) Rear IO Connections

General Standards Corporation assumes no responsibility for the use of any circuits in this product. No circuit patent licenses are implied. Information included herein supersedes previously published specifications on this product and is subject to change without notice.

General Standards Corporation
8302A Whitesburg Drive ·Huntsville, AL 35802
Phone: (256)880-8787 or (800)653-9970
FAX: (256)880-8788
Email: sales@generalstandards.com